The Standards People

Insights for Edge Software Developers

Presented by: **Masaki Suzuki**
Senior Manager, KDDI
ETSI MEC 40 Rapporteur & ETSI WP 049 Editor

For: **everyone**

Episode #10 – MEC federation: Deployment considerations

In this episode …

- We will learn how:
  - The architectural aspect of MEC federation
  - Business cases for MEC federation
  - Potential deployment options
  - Additional key considerations
- For your information:
  - This episode is based on the ETSI WP No.49
  - Overview of MEC Federation is introduced in Episode #2
  - Cloud federation overview and essential concepts
  - Phase 3 activities on MEC federation
  - Real-world use cases for MEC federation

ETSI White Paper No. 49

MEC federation: deployment considerations

1st edition – June 2022

ISBN No 979109262070

Author:
Masaki Suzuki, Tetsu Joh, Hyeonsoo Lee, Walter Featherstone, Nurit Sprecher, Dario Sabella, Neal Oliver, Samar Shailendra, Fabrizio Granelli, Cristina Costa, Lijuan Chen, Henrik Nieminen, Oleg Berzin, Faraz Naim

ETSI
06921 Sophia Antipolis CEDEX, France
Tel +33 4 92 94 42 00
info@etsi.org
www.etsi.org

ETSI ISG MEC reference architecture variant for MEC federation

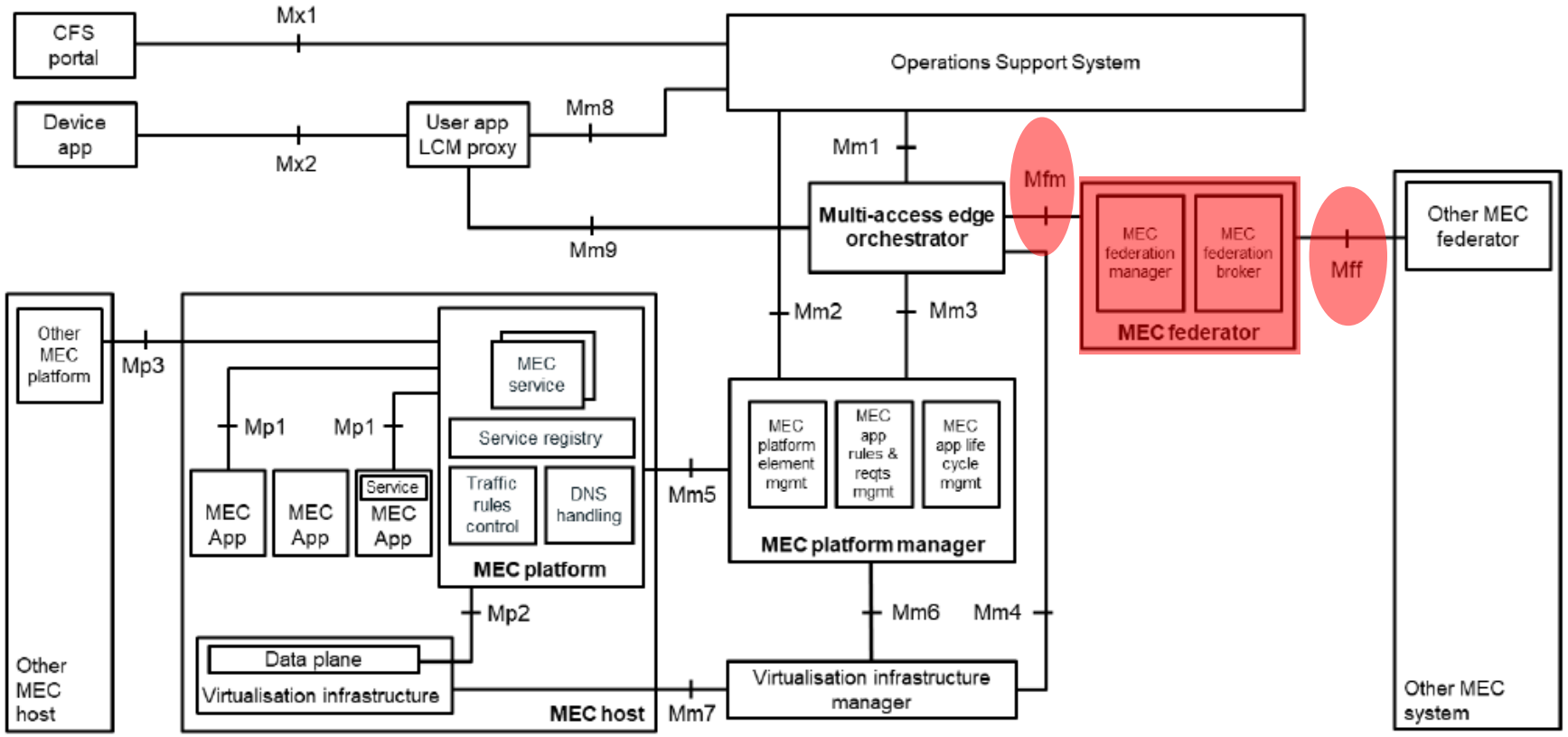

Figure 6: Multi-access edge system reference architecture variant for MEC federation. (Source: ETSI GS MEC 003 [5])

2 ref. points and 1 func. are newly defined, which support the following functionalities:

- Registration of MEC system info.
- MEC system discovery
- (optionally) broker capability
- Information exchange
- Application LCM
- Application monitoring

Synergized architectures among GSMA OPG, ETSI MEC & 3GPP

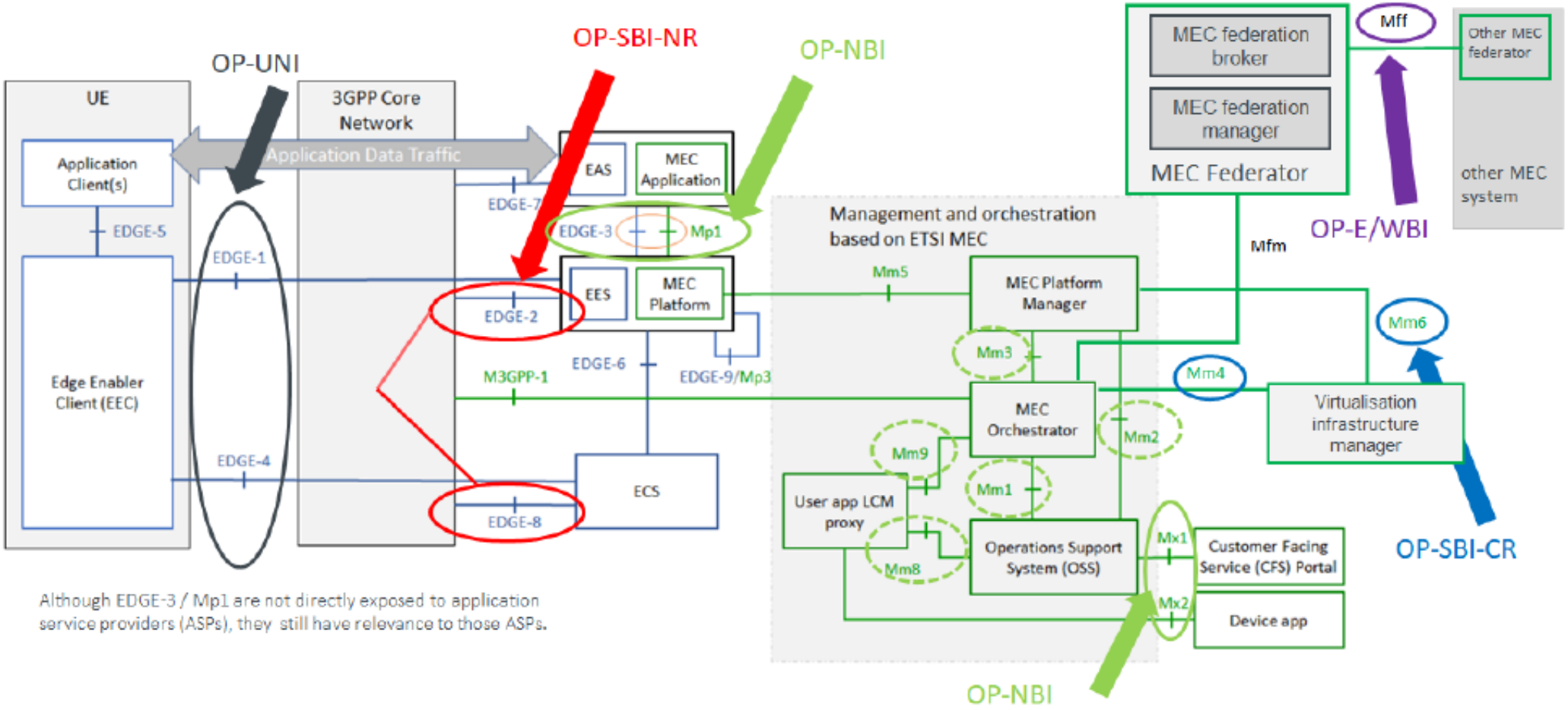

Figure 8: Cross-SDO mapping of the OP architecture (top-down approach).

Shared Operator Platform scenario in GSMA OPG

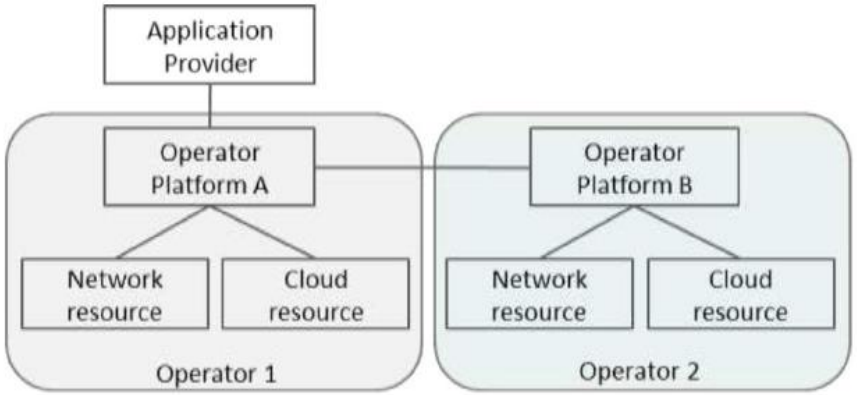

Figure 1: Each operator has its own OP (Source: Annex C.1 of GSMA OPG PRD [3])

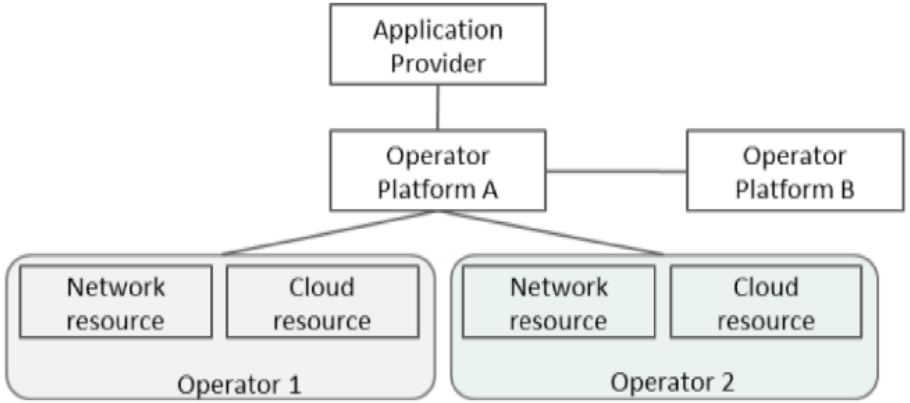

Figure 2: Multiple operators share the same OP (Source: Annex C.1 of GSMA OPG PRD [3])

OP can be considered as a facilitator of customers' seamless access to edge applications instantiated within a federation of edge networks.

These scenarios could be starting points for the industry.

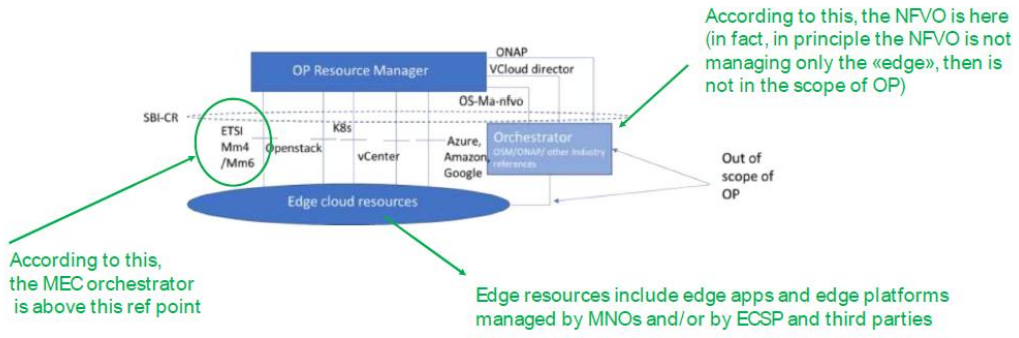

Figure 3: Overview of possible SBI-CR integrations (source Section 3.5.2.1.2 of GSMA PRD [3], updated with surrounded comments.)

Business cases for MEC federation (As a whole picture)

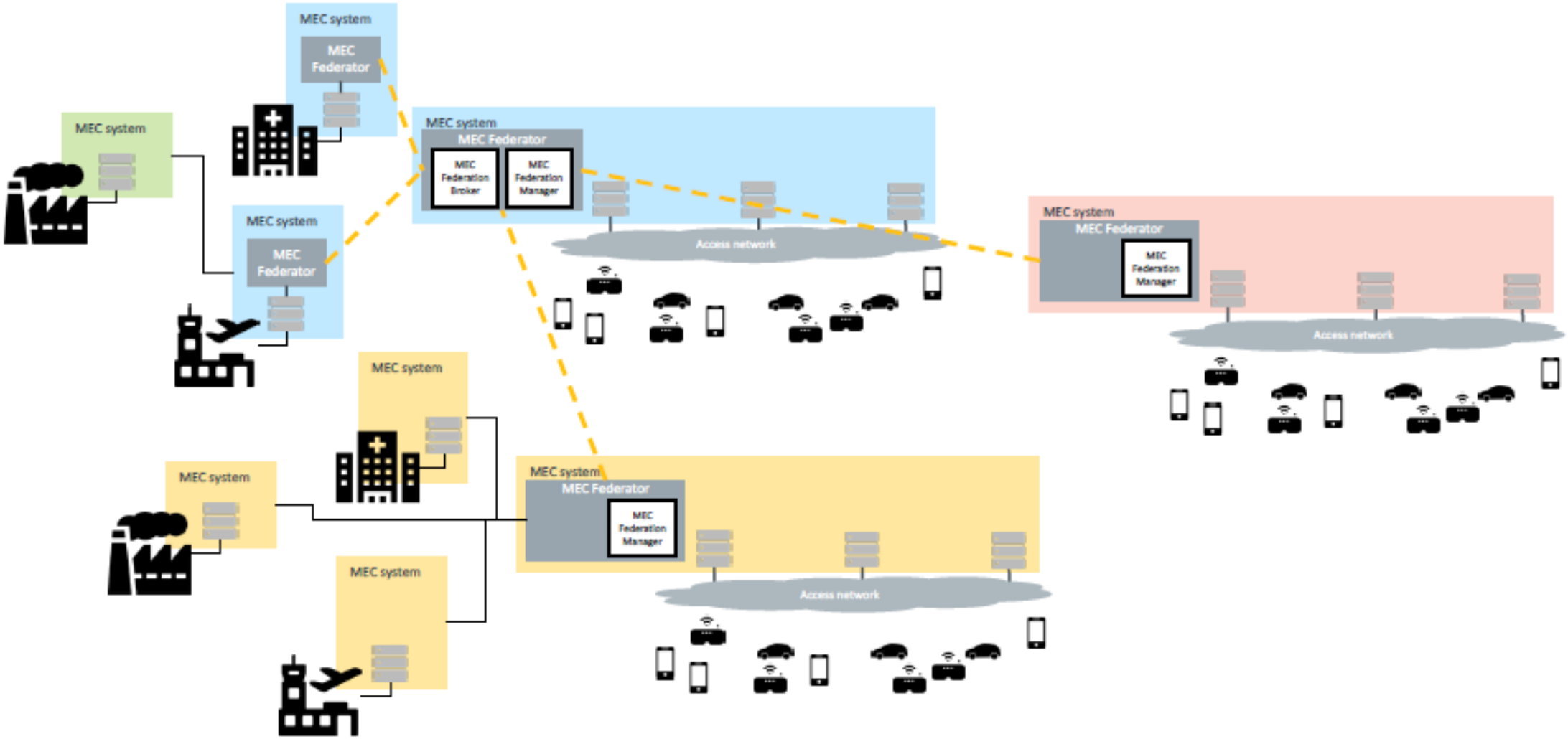

Figure 19: A whole picture of federated MEC systems.

Potential deployment options
1:1 relation between MEF and MEO

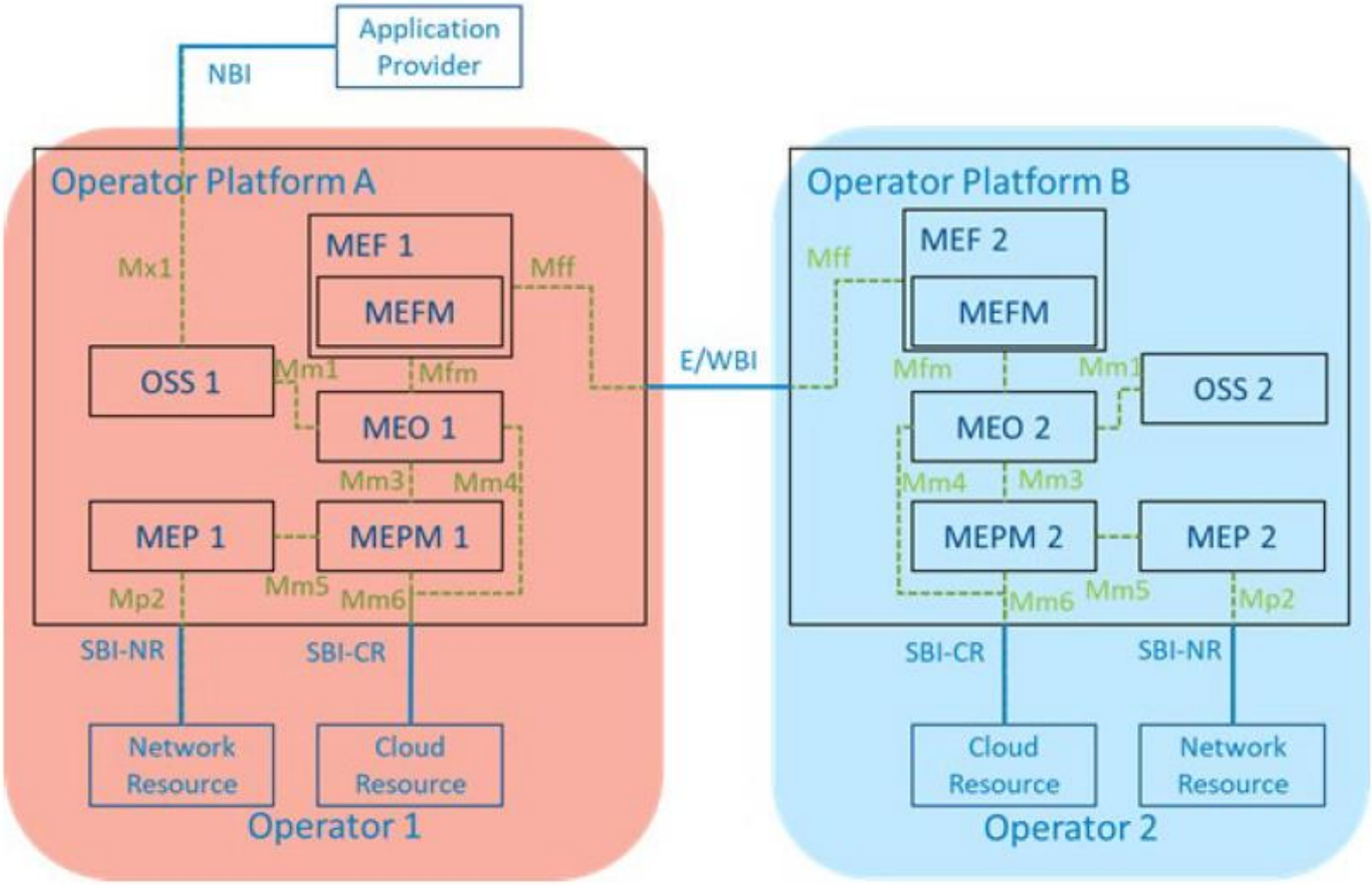

Figure 22: Deployment option of MEC federation in case of 1:1 relation between MEO and MEF.

Potential deployment options
1:n relation between MEF and MEO

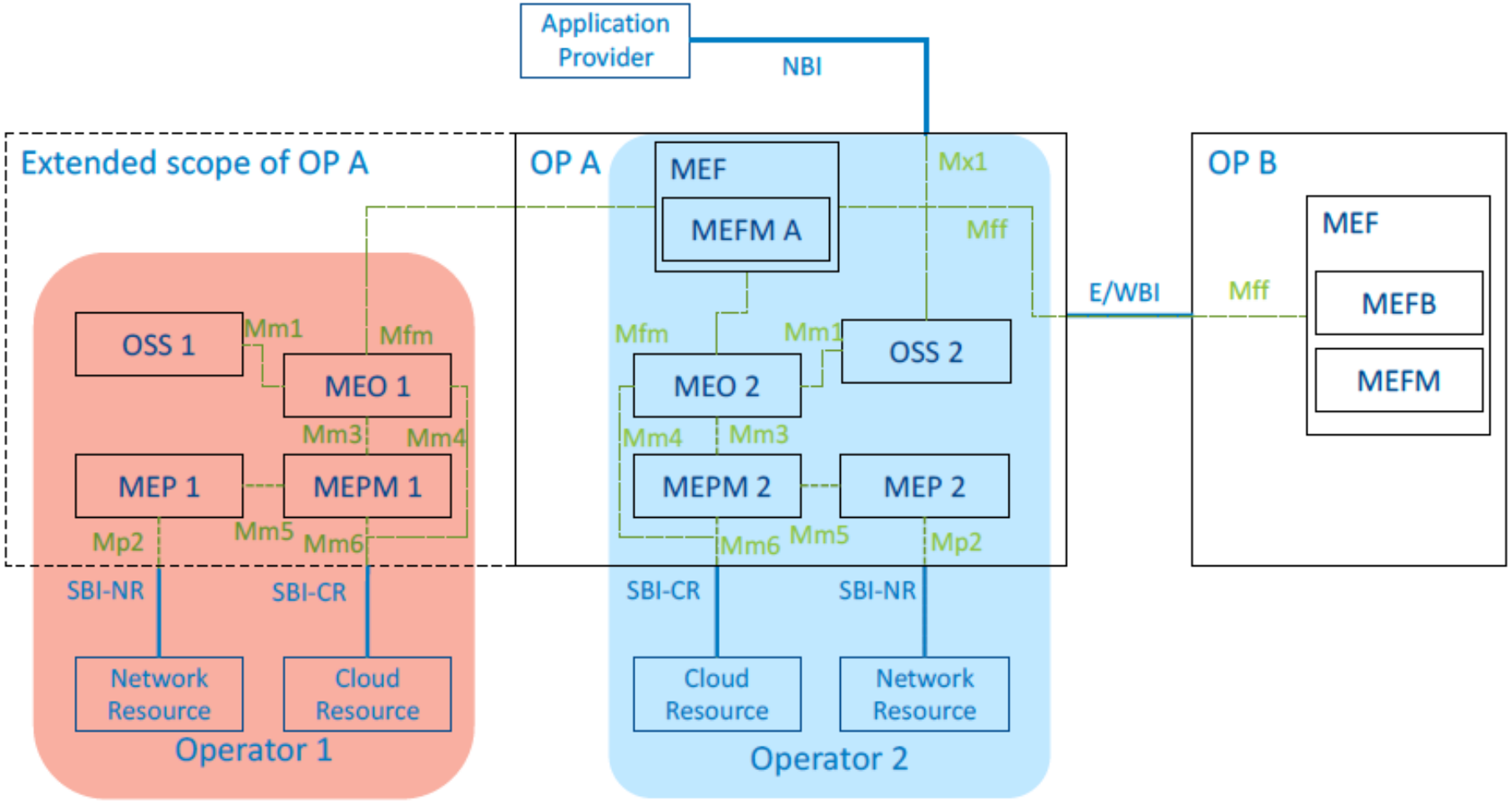

Figure 23: Deployment option of MEC federation in case of 1:N relation between MEF and MEO with a single MEFM role.

Potential deployment options
1:N relation between MEO and MEPM

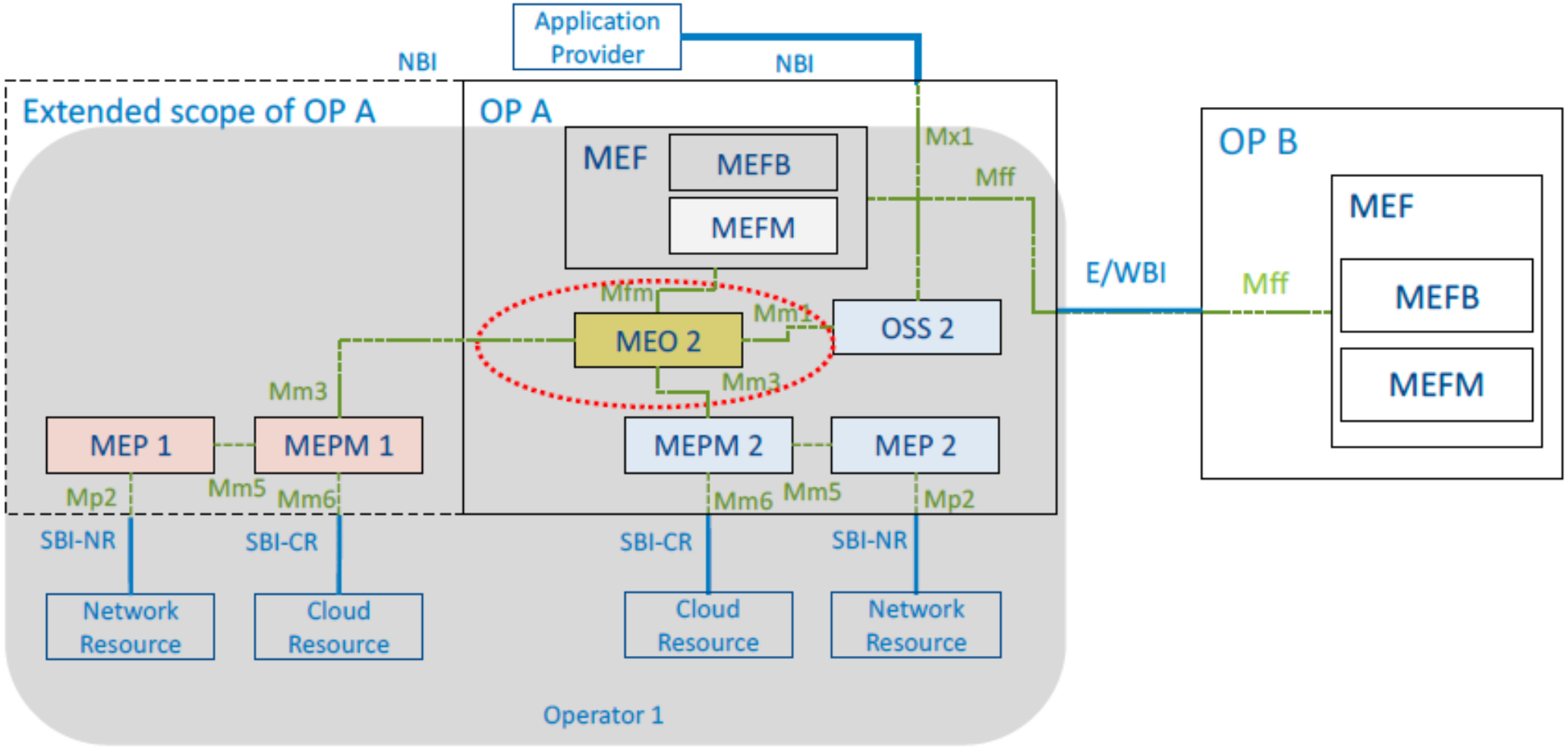

Figure 24: Deployment option of MEC federation in case of 1:N relation between MEO and MEPM.

Potential deployment options
1:N relation between MEF/OSS and MEO

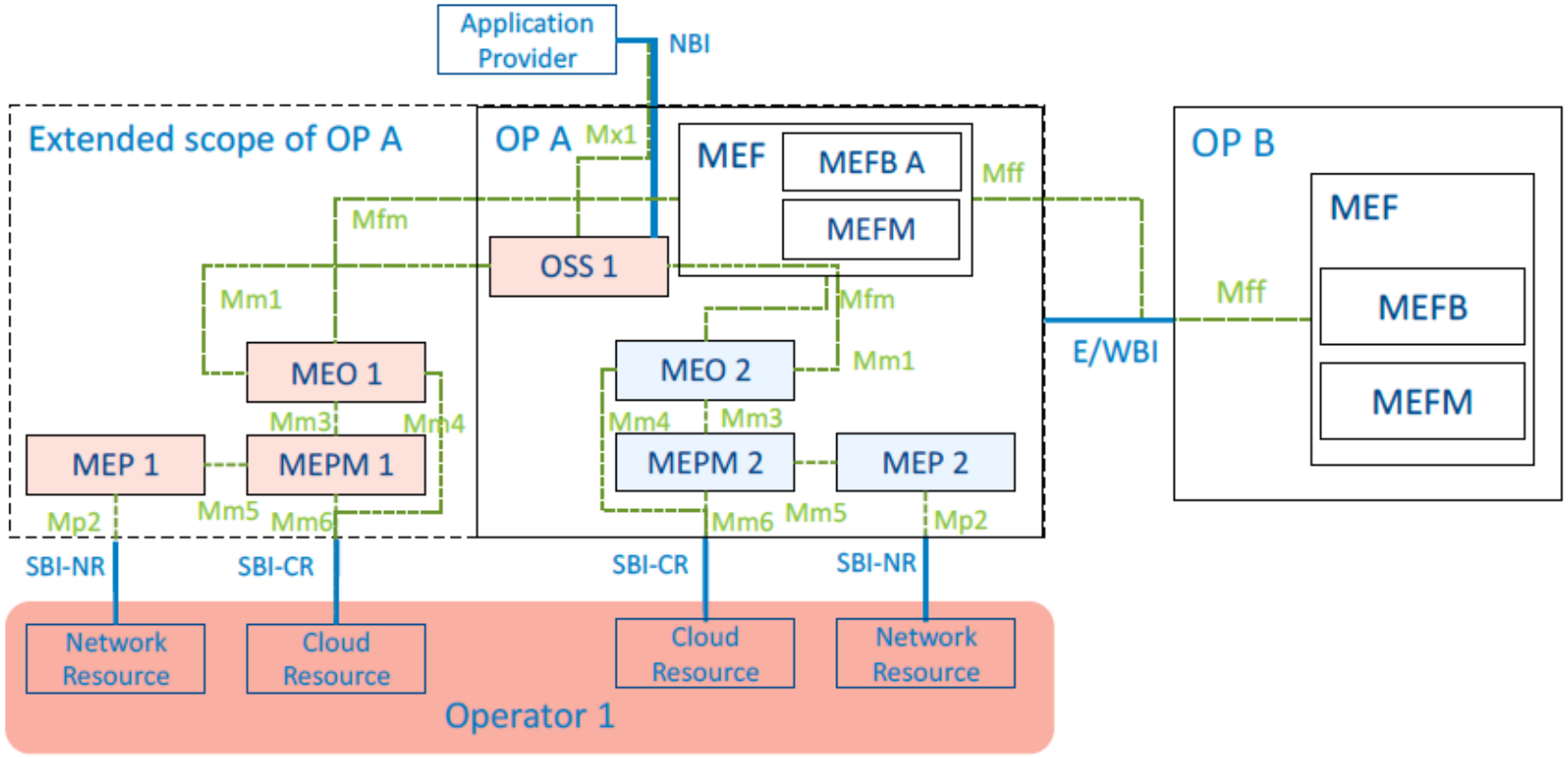

Figure 25: Deployment option of MEC federation in case of 1:N relation between MEF and MEO, corresponding resource is owned by a single operator.

Additional key considerations

- Connection between MEC systems
- Aspects of Multi-domain orchestration
- Security considerations
- Northbound APIs
  - CAPIF
  - CAMARA-OPAG

Conclusions and further resources

What we have learnt:

- The architectural aspect of MEC federation
- Business stories of MEC federation
- Potential deployment options
- Additional key considerations

- Interested to learn more?
  - Check ETSI white paper No. 49 “MEC federation: deployment considerations”:
    - https://www.etsi.org/images/files/ETSIWhitePapers/ETSI_WP_49_MEC-Federation-Deployment-considerations.pdf
  - Stay tuned on the forthcoming ETSI MEC standards MEC 040, available in draft form at:
    - https://docbox.etsi.org/isg/mec/open/MEC040%20FederationAPI%20drafts
  - Follow also the next episodes of the MEC TECH Series ☺

Enjoy the

https://mecwiki.etsi.org/index.php?title=MEC_Tech_Series